ZHIGUANG

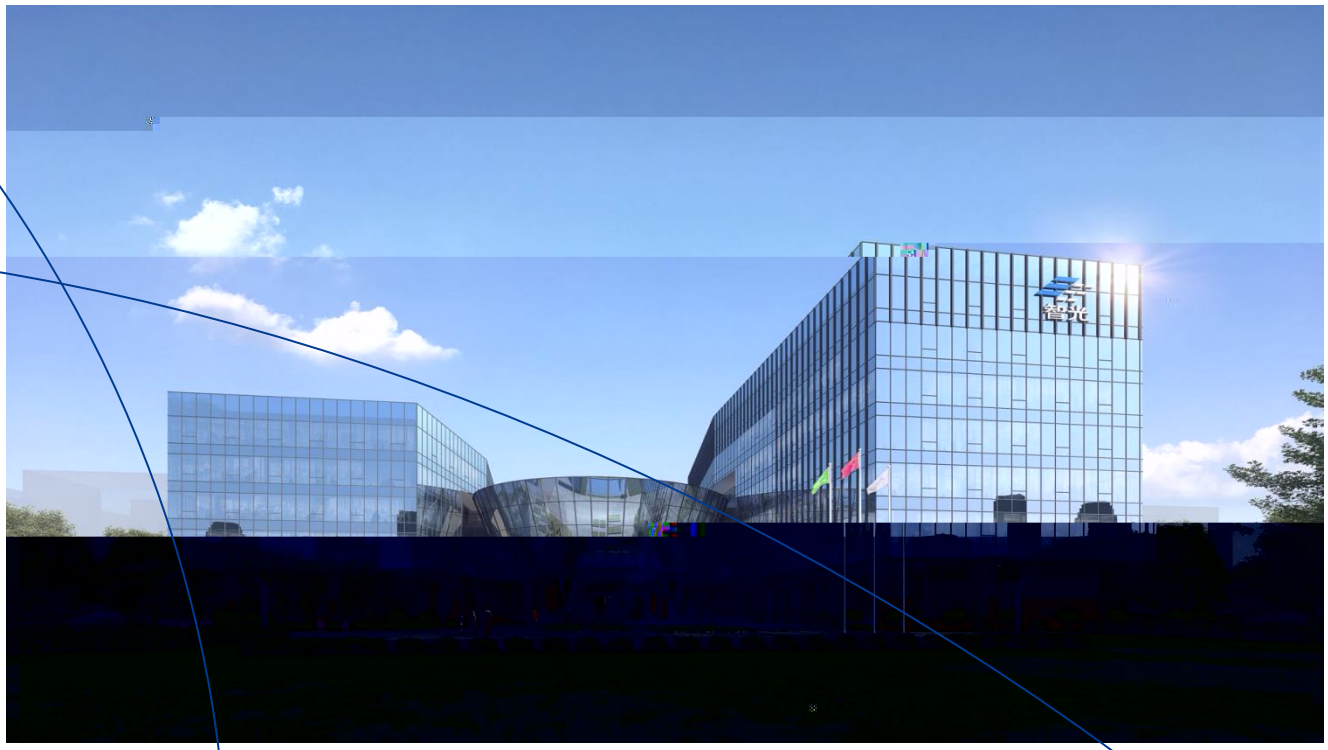

➢

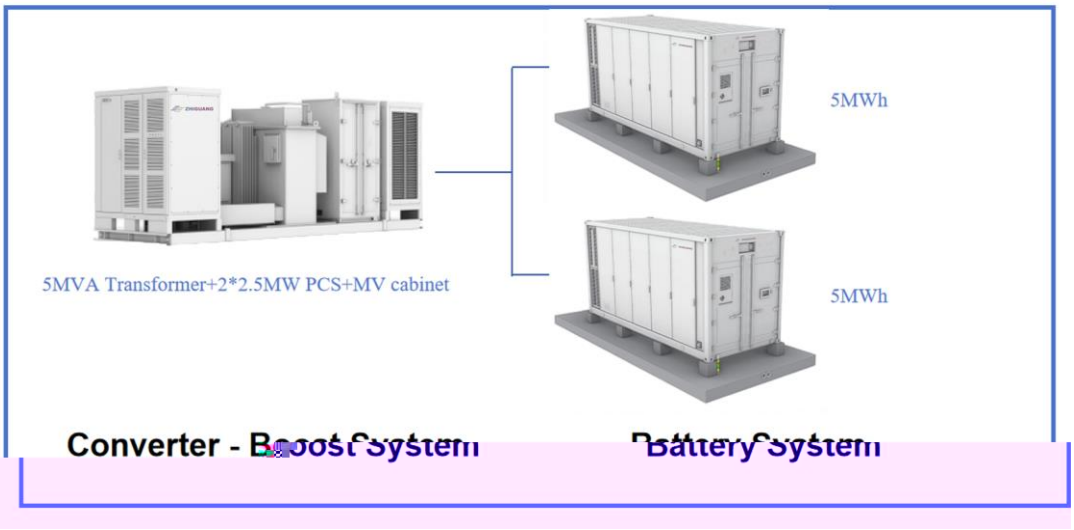
5MWh
5MVA Transformer+2*2.5MW PCS+MV cabinet
5MWh
Converter - Boost System
Battery System

:

➢

ZHIGUANG
ZHIGUANG

:

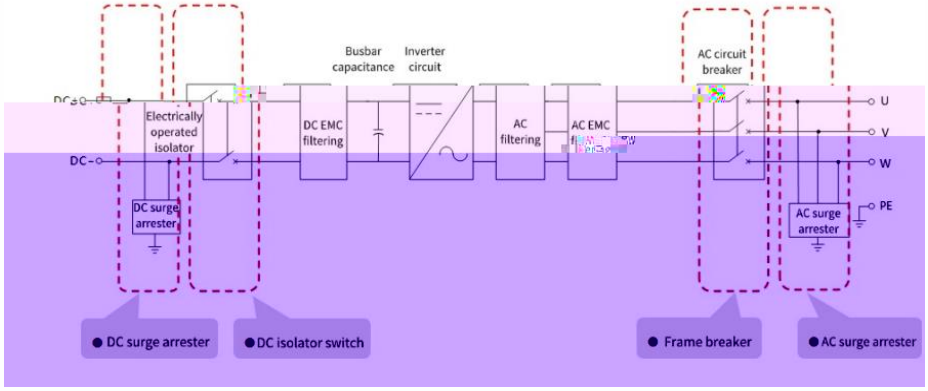
Busbar capacitance
Inverter circuit
AC circuit breaker
DC+
DC-
Electrically operated isolator
DC EMC filtering
AC filtering
AC EMC
U
V
W
PE
DC surge arrester
AC surge arrester
DC surge arrester
DC isolator switch
Frame breaker
AC surge arrester

	°
	（＞ ）
	～
	＜

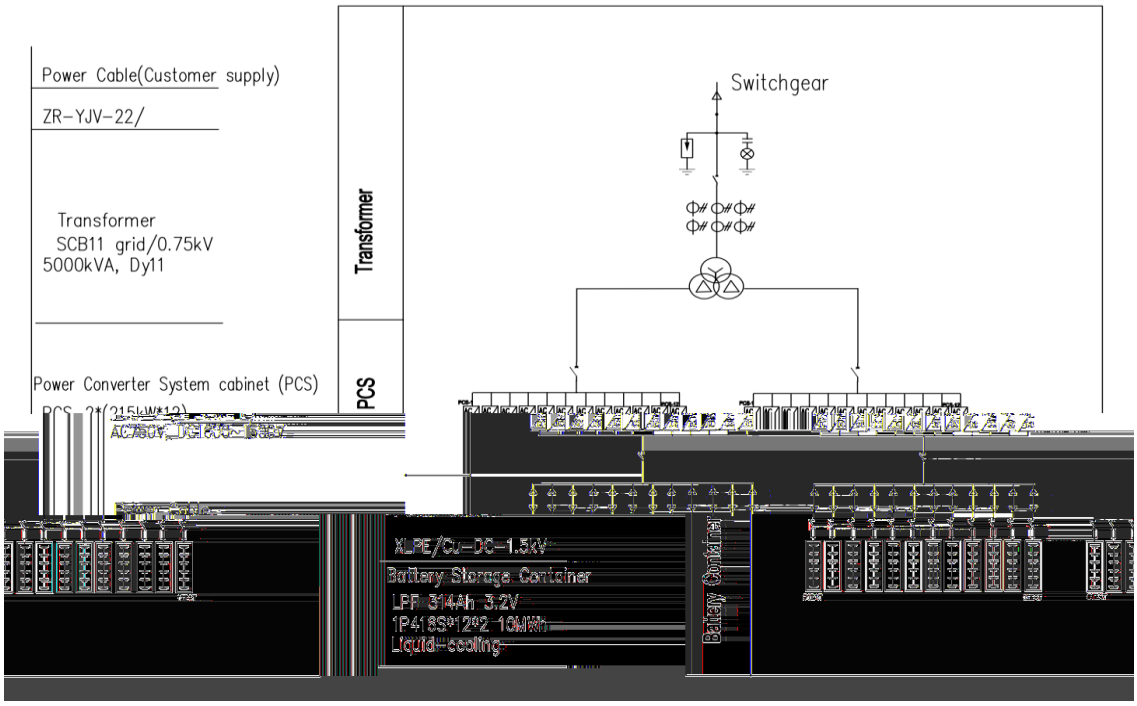
Power Cable(Customer supply)
ZR-YJV-22/
Transformer
SCB11 grid/0.75kV
5000kVA, Dy11
Power Converter System cabinet (PCS)
Transformer
PCS
Switchgear
XLPE/Cu-DC-1.5kV
Battery Storage Container
LFP 314Ah 3.2V
1P416S*12*2 10MWh
Liquid-cooling
Battery Container